PW406-2S

Wide range input voltage power charger board

Introduction:

Wide range input voltage power charger board for 8.4V battery
12V / 24V DC input, output voltage 12V Max. 30W

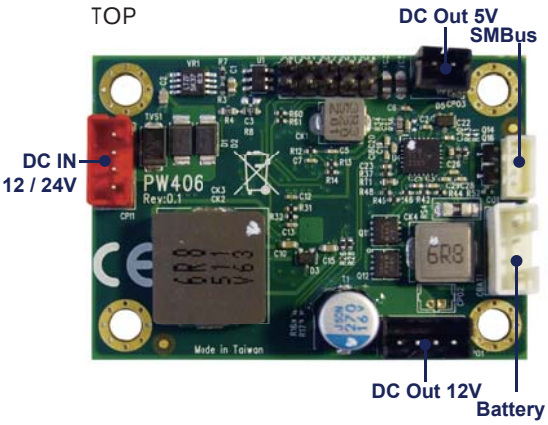

Features:

- DC Input: 12V / 24V
- Output voltage: 12V / 5V
- Charge current: 2A
- Protections: SCP, OCP, OVP, SVP, UVP

Specification:

Type	DC 8.4V Charger board
Input	1 x 4pin wafer
Output port	1 x 4pin & 1 x 2 wafer type
Charger Function	SMBus wafer, BAT wafer, SW wafer
Operating Temperature	-40°C ~ +85°C
Dimensions	35 x 50 mm

Mechanical Drawing:

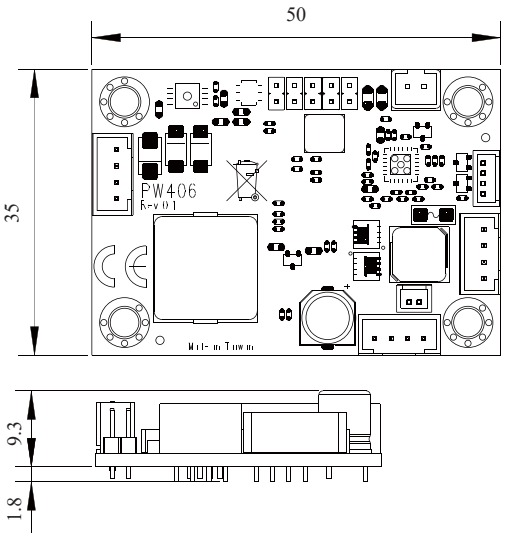

Ordering Information:

PW406-2S

6G9102-0021002-0 PW406-002

Cable Information (Option):

6G6003-7330-0100 L= 9cm,2.0 1 x 4 / DC JK
6G6003-7347-0100 LF, 2.0 1 x 4/2.0 1 x 4, L=15cm
6G6002-8018-0100 L= 20cm, 4p / 1.25 to 4p / 1.25

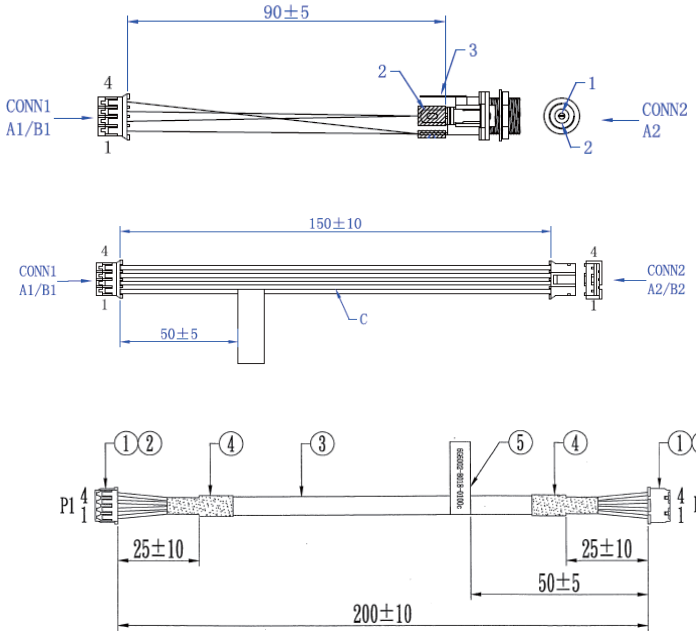

Battery Pack:

6G9044-0061-0100
Battery Pack, 7.4V~8.7V / 3200mA

6G9044-0051-0200
Battery Pack, 7.4V~8.7V / 9600mA

Working Instruction

Charging:

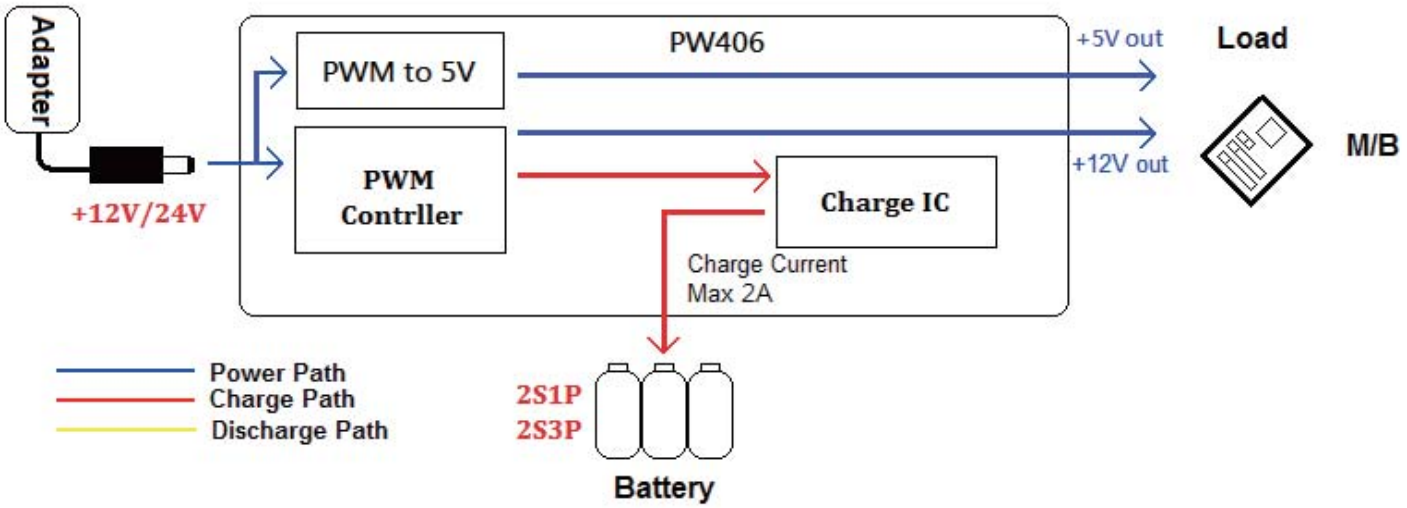
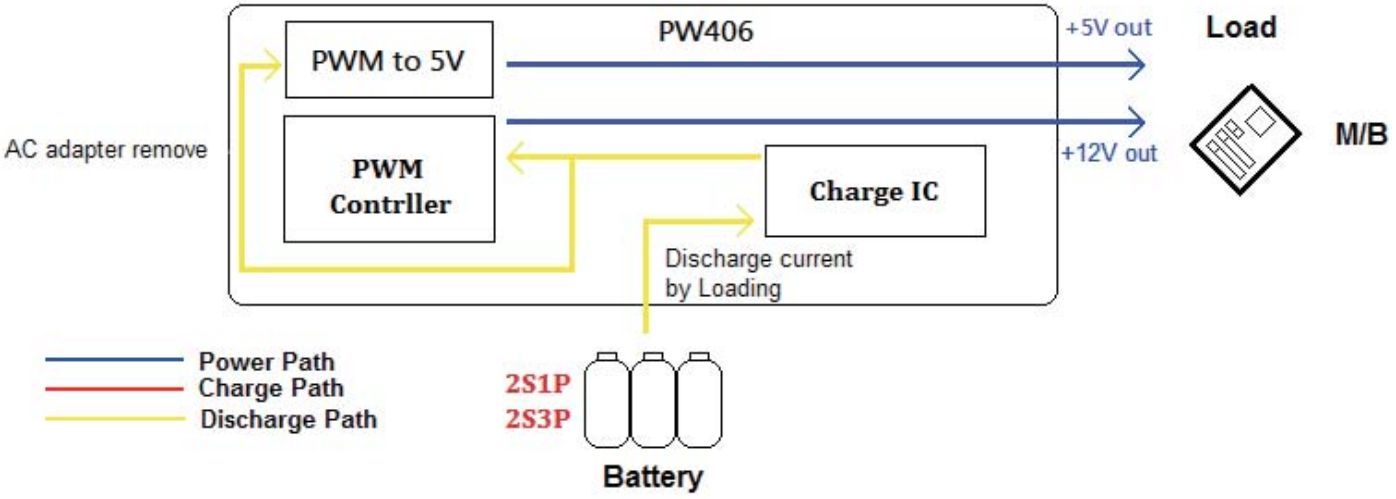
Discharging: